Non-contact safety solution for gates, industrial & garage door applications

SAFETY LIGHT CURTAIN LIGI-01

Sold only to industrial specialist companies

WITTSensoric
A Pepperl+Fuchs Brand

Subject to change

LIGI-01 Technical information

- Powerful, for doors up to 10 m wide
- Can be mounted inside door guides, due to door blanking function
- Easy installation, direct mounting or surface mounting clamps
- Extremely robust thanks to fully encapsulated light curtain
- IP 67, resistance to environmental influences
- Optional version for car wash facilities
- For all current door controls
- Automatic light controls
- Integrated service diagnostics
- Highly resistant to extraneous light
- Compact housing, just 16x16 mm
- Extensive range of length and beam distribution variants available
- Lasered nameplate, legible from front

Just like all of Witt's products, the new LIGI has been designed especially for the harsh usage conditions of gates, garage and industrial doors. The highly compact and fully encapsulated door light curtain offers perfect protection against moisture and vibrations in everyday door use. The LIGI features state-of-the-art electronics and even sets standards for the future with its intelligent software. Its compatibility with standard door controllers means that it can be used universally in almost all door systems. Easy installation options allow for fast and uncomplicated installation of the LIGI.

Technical data

Door widths	1.6 - 10 m	
Operating voltage	10 - 30 V DC	
Current consumption	Transmitter:	approx. 30 mA (24 V DC)
	Receiver:	approx. 20 mA (24 V DC)
Power consumption	approx. 1.2 W	
Type of light	modulated infrared	
OSE output	approx. 950 Hz, alternating signal, short-circuit-proof, protected against reverse polarity	
PNP output	100 mA, short circuit-proof, protected against reverse polarity	
NPN output	100 mA, short circuit-proof, protected against reverse polarity	
Push-pull output	100 mA, short circuit-proof, protected against reverse polarity	
SSR semiconductor relay	100 mA, short circuit-proof, potential-free	
Response time	< 100 ms	
Reactivation time	< 800 ms	
Ambient light safety	≥ 100 klux	
Housing material	Aluminium profile fully encapsulated in 2 K epoxy resin	
Connection	M8-4-pin (OSE/PNP/NPN/Push-pull), M8-6-pin (SSR)	
Degree of protection	IP67 as per EN60529	
Operating temperature	-20 to +60°C	
Storage temperature	-30 to +70°C	

Examples of applications

Up-and-over doors

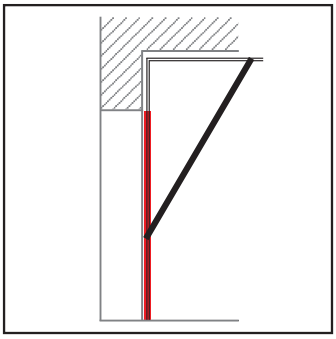

Installation in running plane of leading edge

Sectional doors

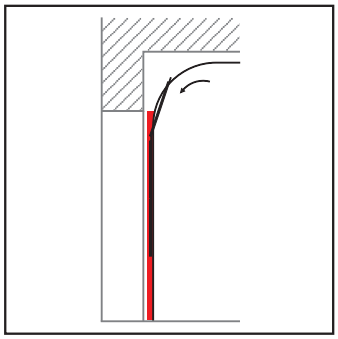

Leading edge protection

Sectional doors

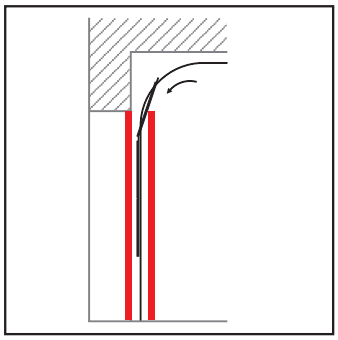

Installation in front of and behind door leaf

Rolling grille doors

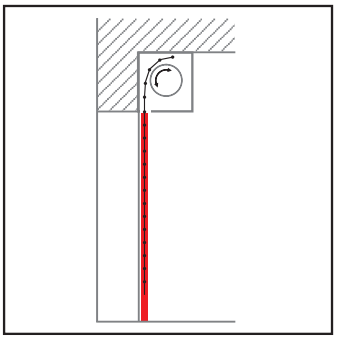

Installation in slide rail

Lifting shutter doors

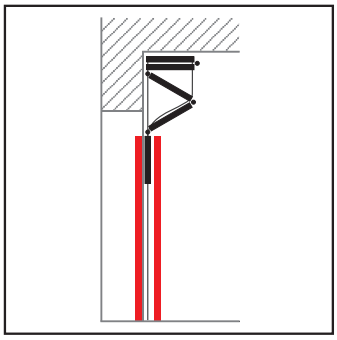

Installation in front of and behind door leaf

Lifting shutter doors

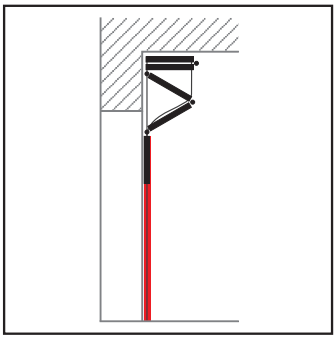

Protection of closing motion thanks to installation in slide rail

Roller shutters/rapid action doors

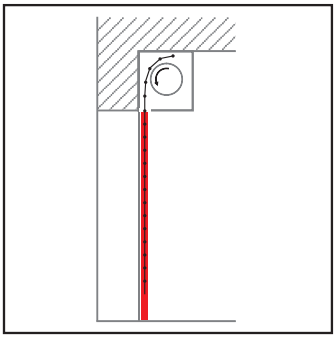

Protection of leading edge thanks to installation in slide rail

Roller shutters/rapid action doors

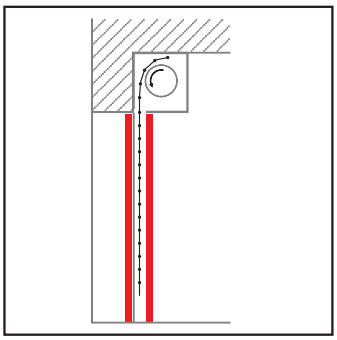

Installation in front of and behind door curtain

Bollards

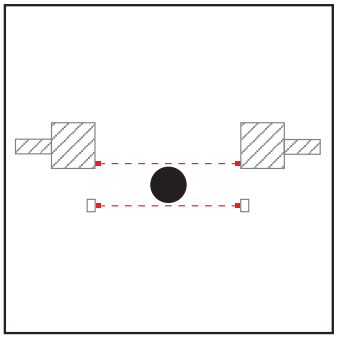

Protection of danger zone for extendable bollards

Sliding Gate

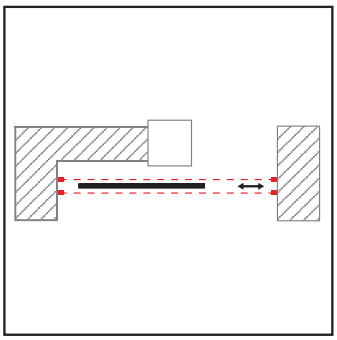

Protection of hazard points

Folding Gate

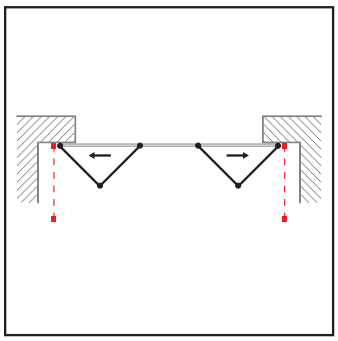

Protection against pinch points

Basic functions

The LIGI is a very powerful safety light curtain equipped with state-of-the-art microprocessor technology. It comes with a very broad capacity range in regard to parameterisation for optimal adjustment to the door types and installation type. It performs a permanent self-test of the internal electronic system and software.

Diagnosis indicators

Setting parameters and service diagnosis are represented by a flashing code of the indicator LEDs. The LIGI monitors all important internal parameters of the electronic system and the software. In case of an error, a flash code is issued.

○ LED illuminated
⬠ LED flashing
⊗ LED off

Indicator transmitter	Indicator receiver	Description	Error	Solution
⊗ ⊗	⊗ ⊗		no power supply	Check power supply
⊗ ⊗ ⊗ ⊗ ⬠ ⬠ ⬠ ⊗	⊗ ⊗	Yellow LED flashes 3x, long pause	Receiver polarity reversed	Check operating voltage for receiver
	⊗ ⊗ ⊗ ⊗ ⬠ ⬠ ⊗ ⊗	Red LED flashes 2x, long pause	Short-circuit at output	Check output line, overload, incorrectly connected, line faulty, output in light curtain faulty
⊗ ⊗ ⊗ ⊗ ⬠ ⬠ ⬠ ⊗	⊗ ⊗ ⊗ ⊗ ⬠ ⬠ ⬠ ⊗	LEDs flash 3x, long pause	Fault in sync line	Check sync line, should only be connected between transmitter and receiver
⬠ ⊗ ⬠ ⊗ ⬠ ⊗ ⬠ ⊗	⬠ ⊗ ⬠ ⊗ ⬠ ⊗ ⬠ ⊗	All LEDs flashing	Internal device error	Light curtain needs to be replaced

Runtime monitoring

To increase operational safety, the LIGI is equipped with a feature which monitors the span of the door movement in the area from the floor up to 500 mm. If a standstill occurs in this range, the switching output is activated and the door can only be moved up. This is the case when the door is closed. The output remains activated in this case until all the light beams of the LIGI are free again.
In the range of 500 mm up to the maximum height of the protected area, the door can also be operated with intermediate stops.

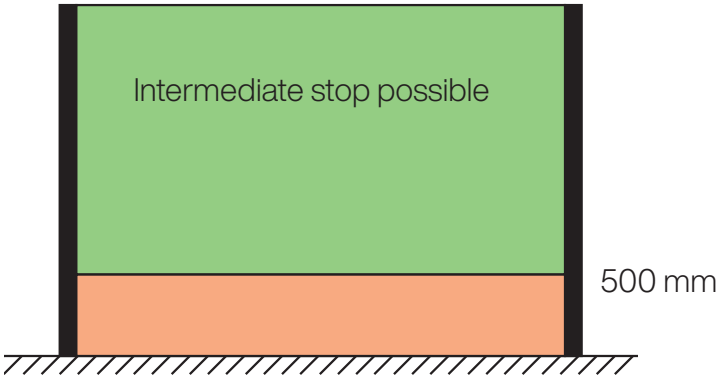

Test inputs / adjustment mode

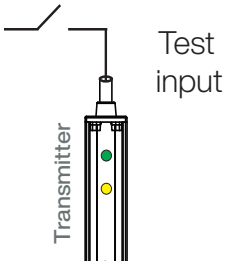

Function assignment for test input
The test input on the LIGI transmitter is used with time control for two functions.

1. Test of the light curtain using the control
2. Alignment mode through activation of the test input for at least 15s

Switch variants for test input

	T00	T01	T02	T03	T04	T05
Test input switching	OSE output	PNP output	PNP output	NPN output	NPN output	SSR output
10 - 30 V DC	Adjustment > 15s	Operation	Test adjustment > 15s	Operation	Test adjustment > 15s	Test Adjustment > 15s
open	Operation	Test adjustment > 15s	Operation	Operation	Test Adjustment > 15s	Operation
GND	Operation	Test adjustment > 15s	Operation	Test Adjustment > 15s	Operation	Test Adjustment > 15s
Internal test input	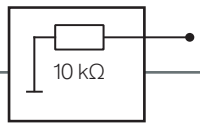			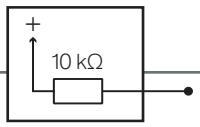		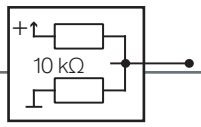

Alignment mode

If the test input is activated for longer than 15s, the LIGI internally measures the OSE signal at the receiver. The light signal quality is indicated through a flashing code of the indicator LEDs on the receiver. This serves to indicate the signal strength to solve problems with the adjustment, pollution or installation. Furthermore, it is also a helpful function to detect errors if service is needed and during the recommended annual inspection.

activated test input	Transmitter	Receiver	Description
0 - 15s	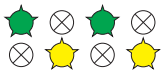		LEDs flash in alternation
> 15s		**Output of measured value**	
			green LED flashes Insufficient light reserve
		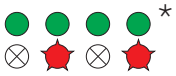 *	green LED on red LED flashes

* The faster the flashing frequency of the red LEDs, the greater the light reserve.

Troubleshooting if the light reserve is insufficient:
clean the LIGI, check adjustment, possibly check installation behind the panel if the LIGI or the panel has shifted.

Programmable blanking

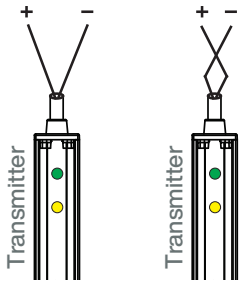

F05 Reverse polarity of operating voltage

Only for order option F05
Switching between blanking/without blanking through reverse polarity of the operating voltage at the transmitter

Blanking/door function F00 and F05
The LIGI is preconfigured with the blanking/door function and can be installed directly in the closing level of the door. In this dynamic mode, the LIGI distinguishes between whether the light beams are systematically interrupted while the door is closing by the door leaf, or if an obstacle penetrates into or is present in the protected area.

Without blanking/classic light curtain function F01, F05 and F07
For door systems where the installation is not possible at the closing level, e.g. for roller shutters, the LIGI can also be installed directly in front of the door. For this type of installation in front of the door, we recommend the settings for the classic function. With the F05 (or F01) option, the classic light curtain function is selected through the reverse polarity of the operating voltage. Switching is now activated with each interruption of the light beam.

Mounted in the door guides at the closing level with blanking (default) F00/F05

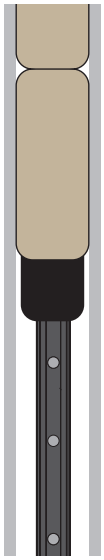

Program installation in front of door without blanking F01/F05/F07

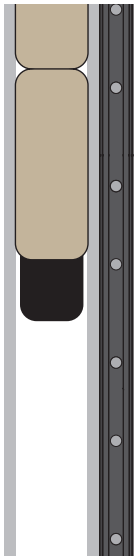

Settings recommended for installation in front of the door

1. Set function 'without blanking'
2. 'without light control' function Program luminance directly at open door (see chapter on Light control)

Two-way installation

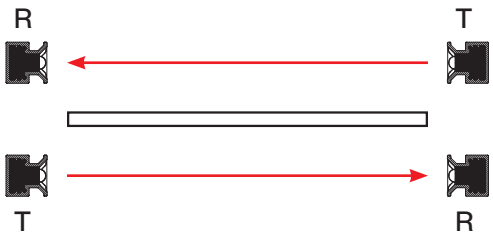

To minimise the mutual impact of two LIGIs for installation in front of the door, they must be installed alternately.

Programmable light control

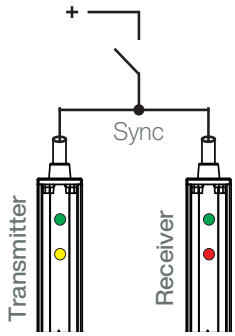

With light control (default)

The LIGI is delivered by default with an automated luminance control.
The control continuously adapts the luminance to the operating conditions.

Programming the luminance

For the installation of the LIGI in front of the door, especially in door systems with very high reflective values, e.g. circle-matted structures, stainless steel and reflecting surfaces, the light control may be disrupted.

In these cases, the ideal luminance can be teached-in directly at the open door.
This serves to disable the automated luminance control.

Settings recommended for installation in front of the door

1. Set function 'without blanking' (only for F05)
2. 'without light control' function teach-in luminance directly on the open door

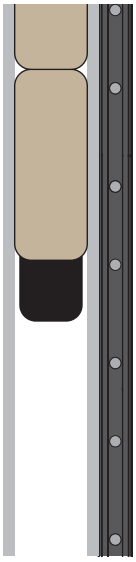

Procedure:

1. Door must be open
2. LIGI must be connected and ready for operation
3. LIGI must have uninterrupted free view during the reading of approx. 10s
4. Sync line for approx. 1s connected with the positive pole, reading and setting starts

Start (when protected area is vacant)

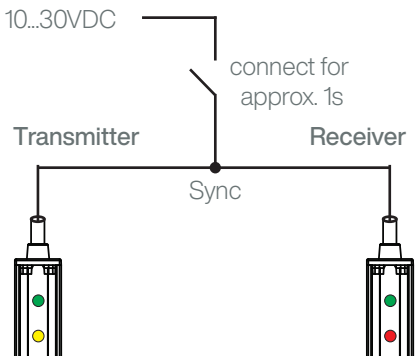

Indicator LEDs on receiver	
Indicator before start protected area vacant	● ⊗
Programming phase, approx. 10s green on / red flashes	● ● ● ● ● ● ● ⊗ ⊗ ⊗ ⊗ ⊗ ⊗ ⊗
Programming phase completed Operational	● ⊗

OSE output

The safety-oriented OSE output is supported by most door controls.

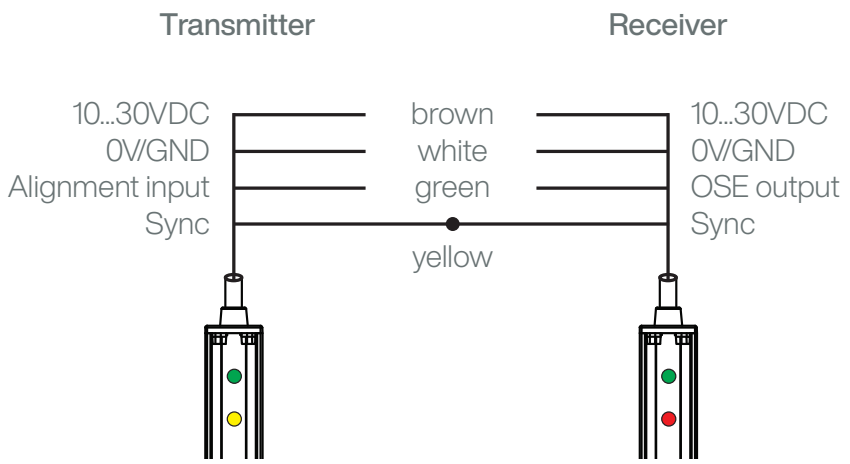

I = max. 20 mA, typ. 950 Hz

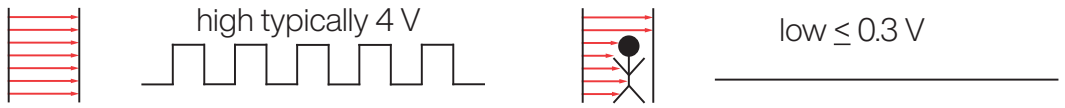

SSR semiconductor relay output

The SSR output is a semiconductor relay with potential-free contact.

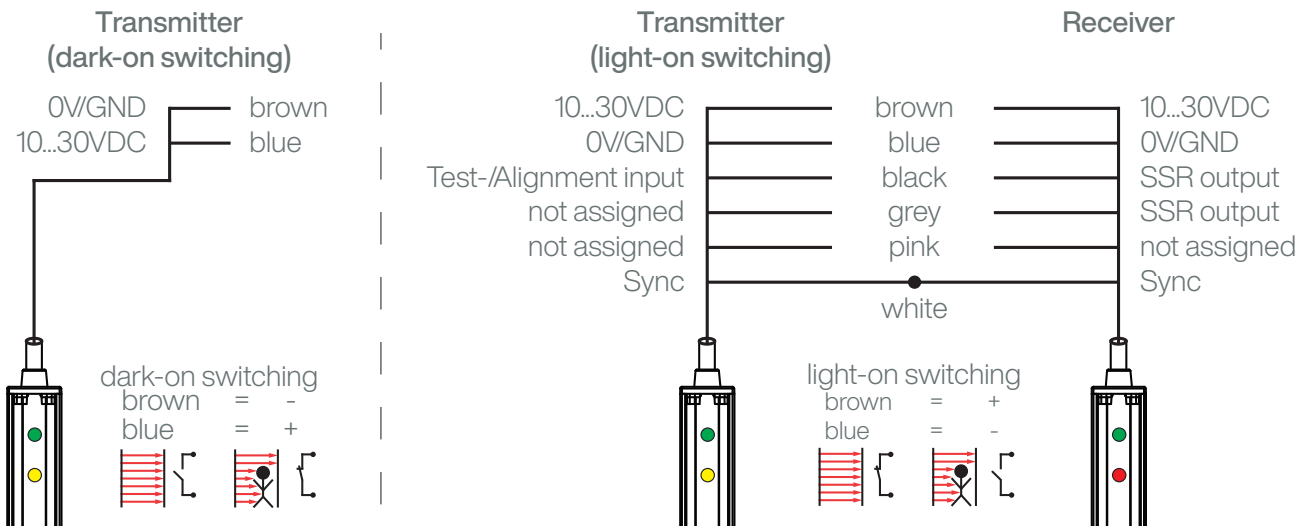

Transistor outputs

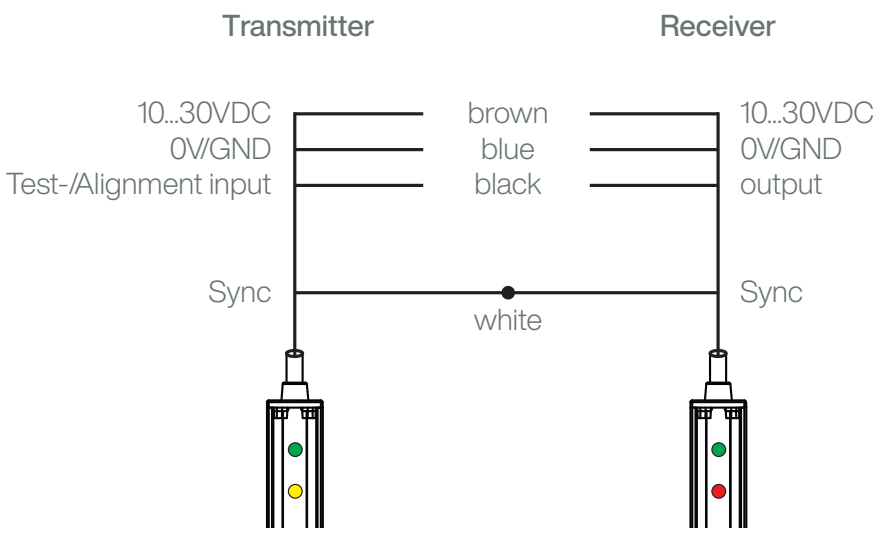

PNP output

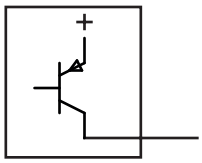

Order options P01/P02/P03
The PNP output is a positive-switching semiconductor output.
short circuit-proof, protected against reverse polarity, max. 100 mA

NPN output

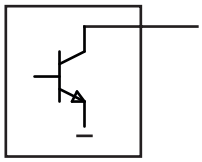

Order options N01/N02/N03
The NPN output is a negative-switching semiconductor output.
short circuit-proof, protected against reverse polarity, max. 100 mA

Push-pull output

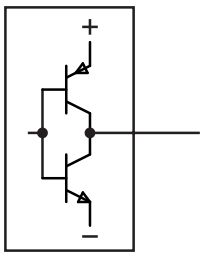

Order options PP1/PP2/PP3
The push-pull is a counteracting semiconductor output that puts both the positive and the negative potential through.
short circuit-proof, protected against reverse polarity, max. 100 mA

C-1 Variants – Standard model

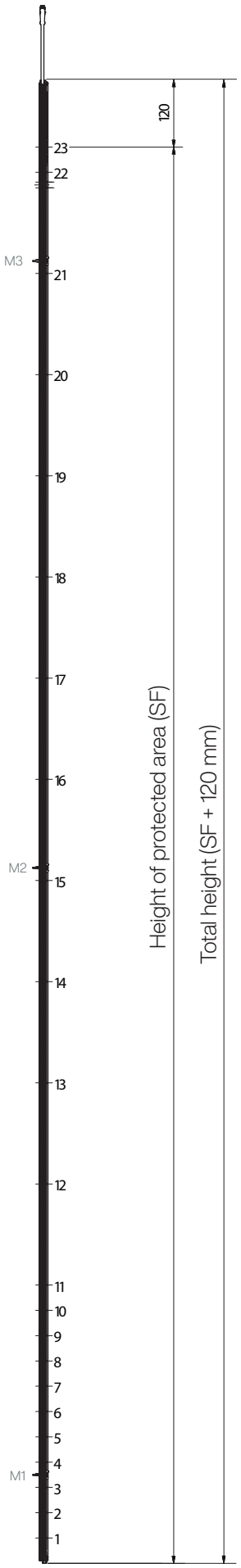

01 - C23-1

Normative beam distribution Standard model height

KA	C23-1 SA	C23-1 SF	C22-1 SA	C22-1 SF	C21-1 SA	C21-1 SF	C20-1 SA	C20-1 SF	C19-1 SA	C19-1 SF
23	45	2520								
22	180	2475	45	2340						
21	180	2295	180	2295	45	2160				
20	180	2115	180	2115	180	2115	45	1980		
19	180	1935	180	1935	180	1935	180	1935	45	1800
18	180	1755	180	1755	180	1755	180	1755	180	1755
17	180	1575	180	1575	180	1575	180	1575	180	1575
16	180	1395	180	1395	180	1395	180	1395	180	1395
15	180	1215	180	1215	180	1215	180	1215	180	1215
14	180	1035	180	1035	180	1035	180	1035	180	1035
13	180	855	180	855	180	855	180	855	180	855
12	180	675	180	675	180	675	180	675	180	675
11	45	495	45	495	45	495	45	495	45	495
10	45	450	45	450	45	450	45	450	45	450
09	45	405	45	405	45	405	45	405	45	405
08	45	360	45	360	45	360	45	360	45	360
07	45	315	45	315	45	315	45	315	45	315
06	45	270	45	270	45	270	45	270	45	270
05	45	225	45	225	45	225	45	225	45	225
04	45	180	45	180	45	180	45	180	45	180
03	45	135	45	135	45	135	45	135	45	135
02	45	90	45	90	45	90	45	90	45	90
01	45	45	45	45	45	45	45	45	45	45
00										
M3		2318		2138		1958		1778		1598
M2		1238		1148		1058		968		878
M1		158		158		158		158		158

KA	C18-1 SA	C18-1 SF	C17-1 SA	C17-1 SF	C16-1 SA	C16-1 SF	C15-1 SA	C15-1 SF	C14-1 SA	C14-1 SF	C13-1 SA	C13-1 SF
18	45	1620										
17	180	1575	45	1440								
16	180	1395	180	1395	45	1260						
15	180	1215	180	1215	180	1215	45	1080				
14	180	1035	180	1035	180	1035	180	1035	45	900		
13	180	855	180	855	180	855	180	855	180	855	45	720
12	180	675	180	675	180	675	180	675	180	675	180	675
11	45	495	45	495	45	495	45	495	45	495	45	495
10	45	450	45	450	45	450	45	450	45	450	45	450
09	45	405	45	405	45	405	45	405	45	405	45	405
08	45	360	45	360	45	360	45	360	45	360	45	360
07	45	315	45	315	45	315	45	315	45	315	45	315
06	45	270	45	270	45	270	45	270	45	270	45	270
05	45	225	45	225	45	225	45	225	45	225	45	225
04	45	180	45	180	45	180	45	180	45	180	45	180
03	45	135	45	135	45	135	45	135	45	135	45	135
02	45	90	45	90	45	90	45	90	45	90	45	90
01	45	45	45	45	45	45	45	45	45	45	45	45
00												
M3		1418		1238		1058		878		698		518
M2		788		698		608		518		428		-
M1		158		158		158		158		158		158

KA = channels
SA = beam distances
SF = height of protected area

C-2 Variants – Shorter models with the same number of beams

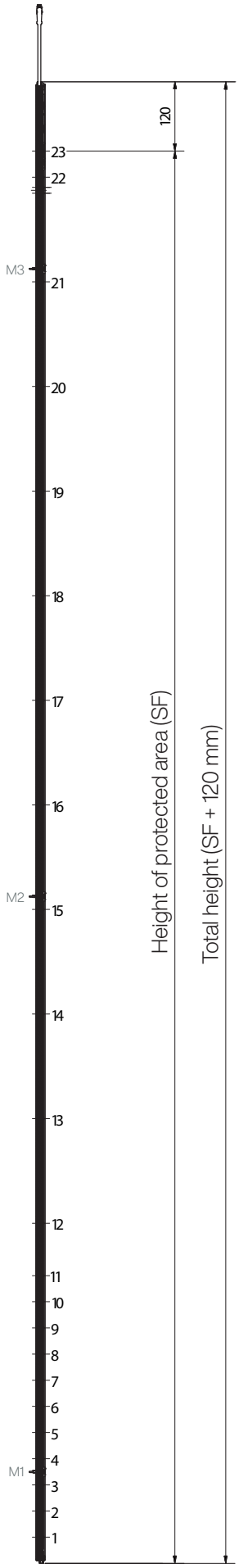

01 - C23-2

Normative beam selection

KA	C23-2 SA	C23-2 SF	C22-2 SA	C22-2 SF	C21-2 SA	C21-2 SF	C20-2 SA	C20-2 SF	C19-2 SA	C19-2 SF
23	45	2430								
22	180	2385	45	2250						
21	180	2205	180	2205	45	2070				
20	180	2025	180	2025	180	2025	45	1890		
19	180	1845	180	1845	180	1845	180	1845	45	1710
18	180	1665	180	1665	180	1665	180	1665	180	1665
17	180	1485	180	1485	180	1485	180	1485	180	1485
16	180	1305	180	1305	180	1305	180	1305	180	1305
15	180	1125	180	1125	180	1125	180	1125	180	1125
14	180	945	180	945	180	945	180	945	180	945
13	180	765	180	765	180	765	180	765	180	765
12	90	585	90	585	90	585	90	585	90	675
11	45	495	45	495	45	495	45	495	45	495
10	45	450	45	450	45	450	45	450	45	450
09	45	405	45	405	45	405	45	405	45	405
08	45	360	45	360	45	360	45	360	45	360
07	45	315	45	315	45	315	45	315	45	315
06	45	270	45	270	45	270	45	270	45	270
05	45	225	45	225	45	225	45	225	45	225
04	45	180	45	180	45	180	45	180	45	180
03	45	135	45	135	45	135	45	135	45	135
02	45	90	45	90	45	90	45	90	45	90
01	45	45	45	45	45	45	45	45	45	45
00										
M3		2228		2048		1868		1688		1508
M2		1148		1103		968		923		788
M1		158		158		158		158		158

KA	C18-2 SA	C18-2 SF	C17-2 SA	C17-2 SF	C16-2 SA	C16-2 SF	C15-2 SA	C15-2 SF	C14-2 SA	C14-2 SF
18	45	1530								
17	180	1485	45	1350						
16	180	1305	180	1305	45	1170				
15	180	1125	180	1125	180	1125	45	990		
14	180	945	180	945	180	945	180	945	45	810
13	180	765	180	765	180	765	180	765	180	765
12	90	585	90	585	90	585	90	585	90	585
11	45	495	45	495	45	495	45	495	45	495
10	45	450	45	450	45	450	45	450	45	450
09	45	405	45	405	45	405	45	405	45	405
08	45	360	45	360	45	360	45	360	45	360
07	45	315	45	315	45	315	45	315	45	315
06	45	270	45	270	45	270	45	270	45	270
05	45	225	45	225	45	225	45	225	45	225
04	45	180	45	180	45	180	45	180	45	180
03	45	135	45	135	45	135	45	135	45	135
02	45	90	45	90	45	90	45	90	45	90
01	45	45	45	45	45	45	45	45	45	45
00										
M3		1328		1148		968		788		608
M2		743		608		563		428		-
M1		158		158		158		158		158

KA = channels
SA = beam distances
SF = height of protected area

A-variants – high beam distribution

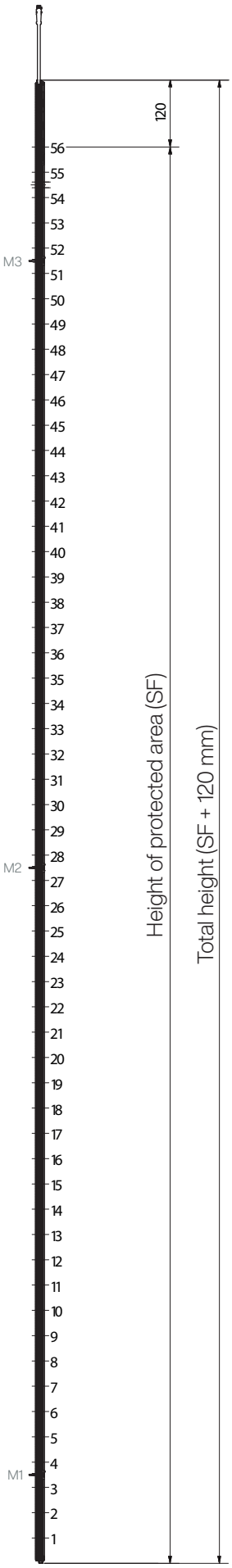

01 - A56

KA	SA	A56												
		SF	A55											
56	45	2520	SF	A54										
55	45	2475	2475	SF	A53									
54	45	2430	2430	2430	SF	A52								
53	45	2385	2385	2385	2385	SF	A51							
52	45	2340	2340	2340	2340	2340	SF	A50						
51	45	2295	2295	2295	2295	2295	2295	SF	A49					
50	45	2250	2250	2250	2250	2250	2250	2250	SF	A48				
49	45	2205	2205	2205	2205	2205	2205	2205	2205	SF	A47			
48	45	2160	2160	2160	2160	2160	2160	2160	2160	2160	SF	A46		
47	45	2115	2115	2115	2115	2115	2115	2115	2115	2115	2115	SF	A45	
46	45	2070	2070	2070	2070	2070	2070	2070	2070	2070	2070	2070	SF	A44
45	45	2025	2025	2025	2025	2025	2025	2025	2025	2025	2025	2025	2025	SF
44	45	1980	1980	1980	1980	1980	1980	1980	1980	1980	1980	1980	1980	1980
43	45	1935	1935	1935	1935	1935	1935	1935	1935	1935	1935	1935	1935	1935
42	45	1890	1890	1890	1890	1890	1890	1890	1890	1890	1890	1890	1890	1890
41	45	1845	1845	1845	1845	1845	1845	1845	1845	1845	1845	1845	1845	1845
40	45	1800	1800	1800	1800	1800	1800	1800	1800	1800	1800	1800	1800	1800
39	45	1755	1755	1755	1755	1755	1755	1755	1755	1755	1755	1755	1755	1755
38	45	1710	1710	1710	1710	1710	1710	1710	1710	1710	1710	1710	1710	1710
37	45	1665	1665	1665	1665	1665	1665	1665	1665	1665	1665	1665	1665	1665
36	45	1620	1620	1620	1620	1620	1620	1620	1620	1620	1620	1620	1620	1620
35	45	1575	1575	1575	1575	1575	1575	1575	1575	1575	1575	1575	1575	1575
34	45	1530	1530	1530	1530	1530	1530	1530	1530	1530	1530	1530	1530	1530
33	45	1485	1485	1485	1485	1485	1485	1485	1485	1485	1485	1485	1485	1485
32	45	1440	1440	1440	1440	1440	1440	1440	1440	1440	1440	1440	1440	1440
31	45	1395	1395	1395	1395	1395	1395	1395	1395	1395	1395	1395	1395	1395
30	45	1350	1350	1350	1350	1350	1350	1350	1350	1350	1350	1350	1350	1350
29	45	1305	1305	1305	1305	1305	1305	1305	1305	1305	1305	1305	1305	1305
28	45	1260	1260	1260	1260	1260	1260	1260	1260	1260	1260	1260	1260	1260
27	45	1215	1215	1215	1215	1215	1215	1215	1215	1215	1215	1215	1215	1215
26	45	1170	1170	1170	1170	1170	1170	1170	1170	1170	1170	1170	1170	1170
25	45	1125	1125	1125	1125	1125	1125	1125	1125	1125	1125	1125	1125	1125
24	45	1080	1080	1080	1080	1080	1080	1080	1080	1080	1080	1080	1080	1080
23	45	1035	1035	1035	1035	1035	1035	1035	1035	1035	1035	1035	1035	1035
22	45	990	990	990	990	990	990	990	990	990	990	990	990	990
21	45	945	945	945	945	945	945	945	945	945	945	945	945	945
20	45	900	900	900	900	900	900	900	900	900	900	900	900	900
19	45	855	855	855	855	855	855	855	855	855	855	855	855	855
18	45	810	810	810	810	810	810	810	810	810	810	810	810	810
17	45	765	765	765	765	765	765	765	765	765	765	765	765	765
16	45	720	720	720	720	720	720	720	720	720	720	720	720	720
15	45	675	675	675	675	675	675	675	675	675	675	675	675	675
14	45	630	630	630	630	630	630	630	630	630	630	630	630	630
13	45	585	585	585	585	585	585	585	585	585	585	585	585	585
12	45	540	540	540	540	540	540	540	540	540	540	540	540	540
11	45	495	495	495	495	495	495	495	495	495	495	495	495	495
10	45	450	450	450	450	450	450	450	450	450	450	450	450	450
09	45	405	405	405	405	405	405	405	405	405	405	405	405	405
08	45	360	360	360	360	360	360	360	360	360	360	360	360	360
07	45	315	315	315	315	315	315	315	315	315	315	315	315	315
06	45	270	270	270	270	270	270	270	270	270	270	270	270	270
05	45	225	225	225	225	225	225	225	225	225	225	225	225	225
04	45	180	180	180	180	180	180	180	180	180	180	180	180	180
03	45	135	135	135	135	135	135	135	135	135	135	135	135	135
02	45	90	90	90	90	90	90	90	90	90	90	90	90	90
01	45	45	45	45	45	45	45	45	45	45	45	45	45	45
00														
M3		2318	2273	2228	2183	2138	2093	2048	2003	1958	1913	1868	1823	1778
M2		1238	1193	1148	1103	1148	1103	1103	1058	1058	1013	968	923	968
M1		158	158	158	158	158	158	158	158	158	158	158	158	158

A-variants – high beam distribution

KA	SA	A43																
		SF	A42															
43	45	1935	SF	A41														
42	45	1890	1890	SF	A40													
41	45	1845	1845	1845	SF	A39												
40	45	1800	1800	1800	1800	SF	A38											
39	45	1755	1755	1755	1755	1755	SF	A37										
38	45	1710	1710	1710	1710	1710	1710	SF	A36									
37	45	1665	1665	1665	1665	1665	1665	1665	SF	A35								
36	45	1620	1620	1620	1620	1620	1620	1620	1620	SF	A34							
35	45	1575	1575	1575	1575	1575	1575	1575	1575	1575	SF	A33						
34	45	1530	1530	1530	1530	1530	1530	1530	1530	1530	1530	SF	A32					
33	45	1485	1485	1485	1485	1485	1485	1485	1485	1485	1485	1485	SF	A31				
32	45	1440	1440	1440	1440	1440	1440	1440	1440	1440	1440	1440	1440	SF	A30			
31	45	1395	1395	1395	1395	1395	1395	1395	1395	1395	1395	1395	1395	1395	SF	A29		
30	45	1350	1350	1350	1350	1350	1350	1350	1350	1350	1350	1350	1350	1350	1350	SF	A28	
29	45	1305	1305	1305	1305	1305	1305	1305	1305	1305	1305	1305	1305	1305	1305	1305	SF	A27
28	45	1260	1260	1260	1260	1260	1260	1260	1260	1260	1260	1260	1260	1260	1260	1260	1260	SF
27	45	1215	1215	1215	1215	1215	1215	1215	1215	1215	1215	1215	1215	1215	1215	1215	1215	1215
26	45	1170	1170	1170	1170	1170	1170	1170	1170	1170	1170	1170	1170	1170	1170	1170	1170	1170
25	45	1125	1125	1125	1125	1125	1125	1125	1125	1125	1125	1125	1125	1125	1125	1125	1125	1125
24	45	1080	1080	1080	1080	1080	1080	1080	1080	1080	1080	1080	1080	1080	1080	1080	1080	1080
23	45	1035	1035	1035	1035	1035	1035	1035	1035	1035	1035	1035	1035	1035	1035	1035	1035	1035
22	45	990	990	990	990	990	990	990	990	990	990	990	990	990	990	990	990	990
21	45	945	945	945	945	945	945	945	945	945	945	945	945	945	945	945	945	945
20	45	900	900	900	900	900	900	900	900	900	900	900	900	900	900	900	900	900
19	45	855	855	855	855	855	855	855	855	855	855	855	855	855	855	855	855	855
18	45	810	810	810	810	810	810	810	810	810	810	810	810	810	810	810	810	810
17	45	765	765	765	765	765	765	765	765	765	765	765	765	765	765	765	765	765
16	45	720	720	720	720	720	720	720	720	720	720	720	720	720	720	720	720	720
15	45	675	675	675	675	675	675	675	675	675	675	675	675	675	675	675	675	675
14	45	630	630	630	630	630	630	630	630	630	630	630	630	630	630	630	630	630
13	45	585	585	585	585	585	585	585	585	585	585	585	585	585	585	585	585	585
12	45	540	540	540	540	540	540	540	540	540	540	540	540	540	540	540	540	540
11	45	495	495	495	495	495	495	495	495	495	495	495	495	495	495	495	495	495
10	45	450	450	450	450	450	450	450	450	450	450	450	450	450	450	450	450	450
09	45	405	405	405	405	405	405	405	405	405	405	405	405	405	405	405	405	405
08	45	360	360	360	360	360	360	360	360	360	360	360	360	360	360	360	360	360
07	45	315	315	315	315	315	315	315	315	315	315	315	315	315	315	315	315	315
06	45	270	270	270	270	270	270	270	270	270	270	270	270	270	270	270	270	270
05	45	225	225	225	225	225	225	225	225	225	225	225	225	225	225	225	225	225
04	45	180	180	180	180	180	180	180	180	180	180	180	180	180	180	180	180	180
03	45	135	135	135	135	135	135	135	135	135	135	135	135	135	135	135	135	135
02	45	90	90	90	90	90	90	90	90	90	90	90	90	90	90	90	90	90
01	45	45	45	45	45	45	45	45	45	45	45	45	45	45	45	45	45	45
00																		

M3		1733	1688	1643	1598	1553	1508	1463	1418	1373	1328	1283	1238	1193	1148	1103	1058	1013
M2		923	923	878	878	833	788	743	788	743	743	698	698	653	608	563	608	563
M1		158	158	158	158	158	158	158	158	158	158	158	158	158	158	158	158	158

A-variants – high beam distribution

KA	SA	A26															
		SF	A25														
26	45	1170	SF	A24													
25	45	1125	1125	SF	A23												
24	45	1080	1080	1080	SF	A22											
23	45	1035	1035	1035	1035	SF	A21										
22	45	990	990	990	990	990	SF	A20									
21	45	945	945	945	945	945	945	SF	A19								
20	45	900	900	900	900	900	900	900	SF	A18							
19	45	855	855	855	855	855	855	855	855	SF	A17						
18	45	810	810	810	810	810	810	810	810	810	SF	A16					
17	45	765	765	765	765	765	765	765	765	765	765	SF	A15				
16	45	720	720	720	720	720	720	720	720	720	720	720	SF	A14			
15	45	675	675	675	675	675	675	675	675	675	675	675	675	SF	A13		
14	45	630	630	630	630	630	630	630	630	630	630	630	630	630	SF	A12	
13	45	585	585	585	585	585	585	585	585	585	585	585	585	585	585	SF	A11
12	45	540	540	540	540	540	540	540	540	540	540	540	540	540	540	540	SF
11	45	495	495	495	495	495	495	495	495	495	495	495	495	495	495	495	495
10	45	450	450	450	450	450	450	450	450	450	450	450	450	450	450	450	450
09	45	405	405	405	405	405	405	405	405	405	405	405	405	405	405	405	405
08	45	360	360	360	360	360	360	360	360	360	360	360	360	360	360	360	360
07	45	315	315	315	315	315	315	315	315	315	315	315	315	315	315	315	315
06	45	270	270	270	270	270	270	270	270	270	270	270	270	270	270	270	270
05	45	225	225	225	225	225	225	225	225	225	225	225	225	225	225	225	225
04	45	180	180	180	180	180	180	180	180	180	180	180	180	180	180	180	180
03	45	135	135	135	135	135	135	135	135	135	135	135	135	135	135	135	135
02	45	90	90	90	90	90	90	90	90	90	90	90	90	90	90	90	90
01	45	45	45	45	45	45	45	45	45	45	45	45	45	45	45	45	45
00																	

M3		968	923	878	833	788	743	698	653	608	563	518	473	428	383	338	293
M2		563	518	518	473	428	428	428	-	-	-	-	-	-	-	-	-
M1		158	158	158	158	158	158	158	158	158	158	158	158	68	68	68	68

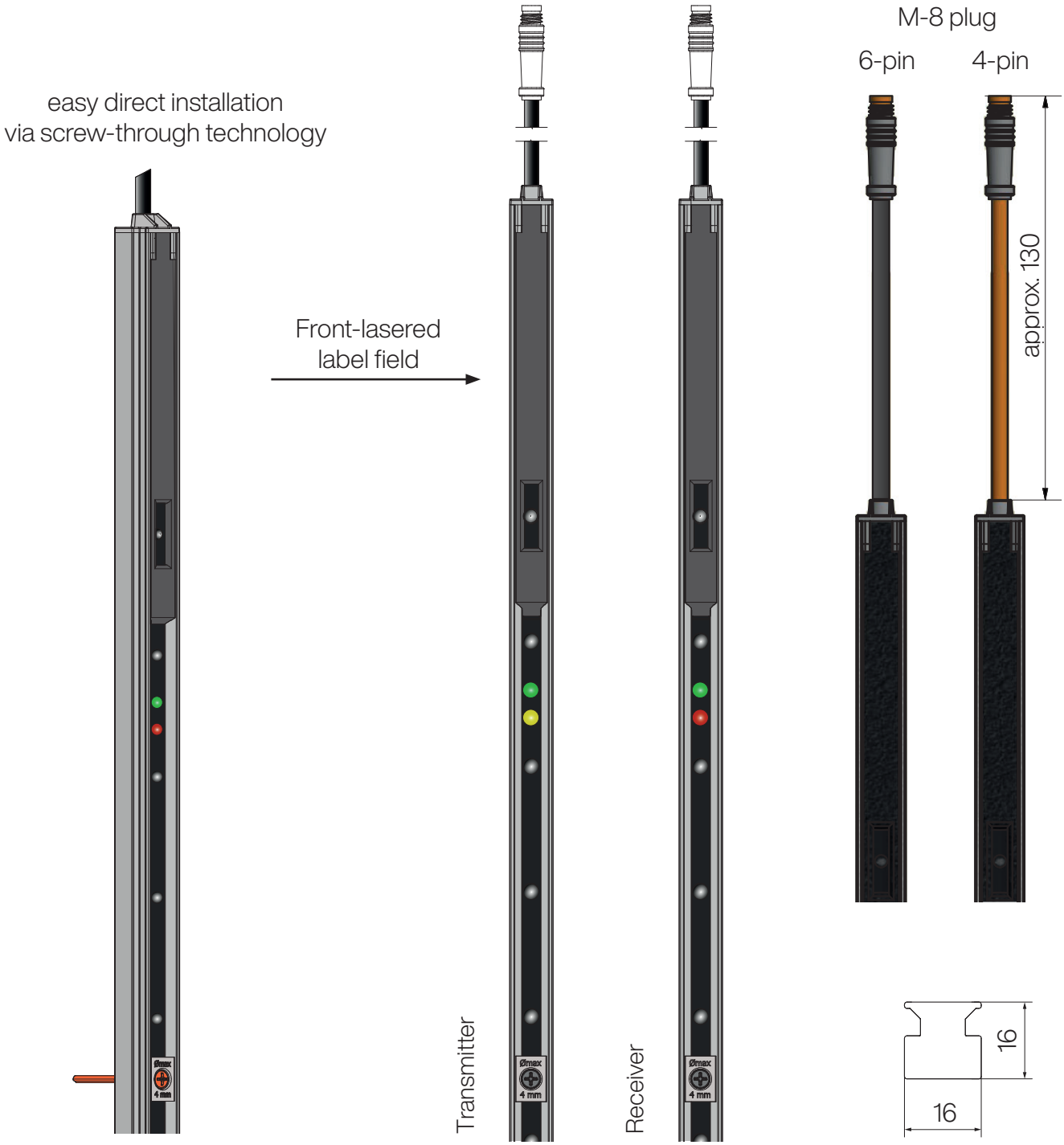

Optional accessories

LIGI-JK10
Adjustable setting clamp
±10°

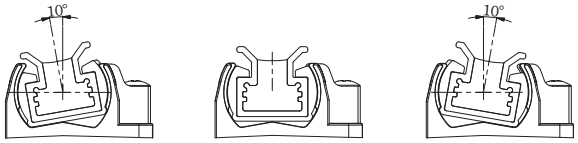

LIGI-HK10
Holding clip

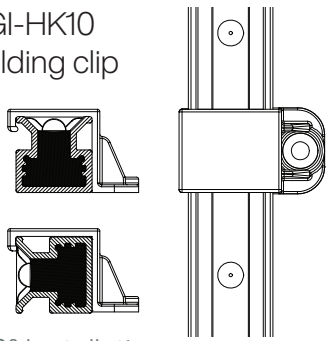

90° Installation

Order code LIGI - safety light curtain

LIGI-01-BW-P01-T00-A-57-2520-F00-C00-S015

Description

Housing design
01 = standard profile 16x16mm

Finish
R = without anodised finish
S = silver
B = black
_W = car wash (optional)

Output versions
OSE = rectangular signal
P01 = PNP - positive switching, light-on switching (preferred configuration)
P02 = PNP - positive switching, dark-on switching
P03 = PNP - light-on/dark-on switching
N01 = NPN - negative switching, light-on switching (preferred configuration)
N02 = NPN - negative switching, dark-on switching
N03 = NPN - light-on/dark-on switching
R01 = SSR - light-on switching
R02 = SSR - dark-on switching
R03 = SSR - light-on/dark-on switching
PP1 = Push-Pull - light = high-level - dark = low-level
PP2 = Push-Pull - light = low-level - dark = high-level
PP3 = Push-Pull - light-on/dark-on switching

Testing
T00 = pull-down resistor, only activates the alignment mode
T01 = pull-down resistor, test/alignment=low or open
T02 = pull-down resistor, test/alignment=high
T03 = pull-up resistor, test/alignment=low
T04 = pull-up resistor, test/alignment=high or open
T05 = open is normal operation, test=low or high

Beam geometry
A = continuous high detection capability
C = standard-compliant detection capability

Active light beams

Active detection zone
in mm

F = Function
00 = with blanking
01 = without blanking
05 = switching blanking/no blanking programmable
07 = Outdoor (always without blanking)

C = Cable length/connector
00 = pig-tail connector with M8 plug, 4-pin
03 = pig-tail connector with M8 plug, 6-pin

S = Special version
015 = standard version
XXX = custom design without functional difference, for example: color, logo, etc.

Order information

The LIGIs with the OSE, PNP, NPN, and push-pull output variants are supplied with a 4-pin M8 plug system, and the output variants with SSR are supplied with a 6-pin M8 plug system. The delivery includes one connecting cable of 5 m and 15 m each.

Overview of light curtain Variant A (beam distance 45 mm)

Description	Number of beams	SF	GH	OSE output Item no.:	PNP output Item no.:	NPN output Item no.:	SSR output Item no.:
01 - A56	56	2520	2640	318740*	318795*	318871*	318922*
01 - A55	55	2475	2595	318737	318792	318868	321504
01 - A54	54	2430	2550	318734	318789	318865	318916
01 - A53	53	2385	2505	318731	318758	318862	318913
01 - A52	52	2340	2460	318728	318755	318859	318910
01 - A51	51	2295	2415	318725	318752	318856	320886
01 - A50	50	2250	2370	318722*	318749*	318853	320889
01 - A49	49	2205	2325	318719	318746	318850	318901
01 - A48	48	2160	2280	318983	319179	319255	319388
01 - A47	47	2115	2235	318986	319093	320653	319482
01 - A46	46	2070	2190	318989	319060	320656	321055
01 - A45	45	2025	2145	318992	321077	320659	321968
01 - A44	44	1980	2100	318995*	319456*	319258	321971
				T00/F05	T01/P01/F05	T03/N01/F05	T05/R03/F00

Overview of light curtain Variant C (standard compliant beam distance)

Description	Number of beams	SF	GH	OSE output Item no.:	PNP output Item no.:	NPN output Item no.:	SSR output Item no.:
01 - C23-1	23	2520	2640	318786*	318847*	318898*	318949*
01 - C23-2	23	2430	2550	318783	318844	318895	318946
01 - C22-1	22	2340	2460	318780	318841	318892	318943
01 - C22-2	22	2250	2370	318777	318838	318889	318940
01 - C21-1	21	2160	2280	318774	318835	318886	318937
01 - C21-2	21	2070	2190	318771*	318832	318883	318934
01 - C20-1	20	1980	2100	318768	318804	318880	318931
01 - C20-2	20	1890	2010	318765	318801	318877	318928
01 - C19-1	19	1800	1920	318762	318798	318874	318925
				T00/F05	T01/P01/F05	T03/N01/F05	T05/R03/F00

SF = height of protected area
GH = total height

*** Preferred variants, colour-coded**
other light curtain types available on request

Notes

Notes

WITTSensoric
A Pepperl+Fuchs Brand

Witt Sensoric GmbH
Ernst-Lau-Straße 12 · 12489 Berlin · Germany
Tel.: +49 (0) 30 / 75 44 94 - 120
sales@witt-sensoric.de
www.witt-sensoric.de
www.witt-sensoric-shop.de

© Witt Sensoric GmbH 09/23